New AB-LF Oscillating Mountings

We are pleased to announce the launch of the new AB-LF product family.

Characteristics and benefits

- The AB-LF family consist of **4** sizes.
- Its outstanding characteristics is a low natural frequency.
- The dynamic transmitted forces are the lowest in the Oscillating Mountings product range.
- The load capacity reaches from 1500N to 8000N.
- All housings (DW and DO) are made of high strength aluminium.
- The inner parts are made of steel components.
- Rubmix 10 guarantees a perfect performance and a high service life.
- Due to the unique design, the product is registered for patent pending.

Product data



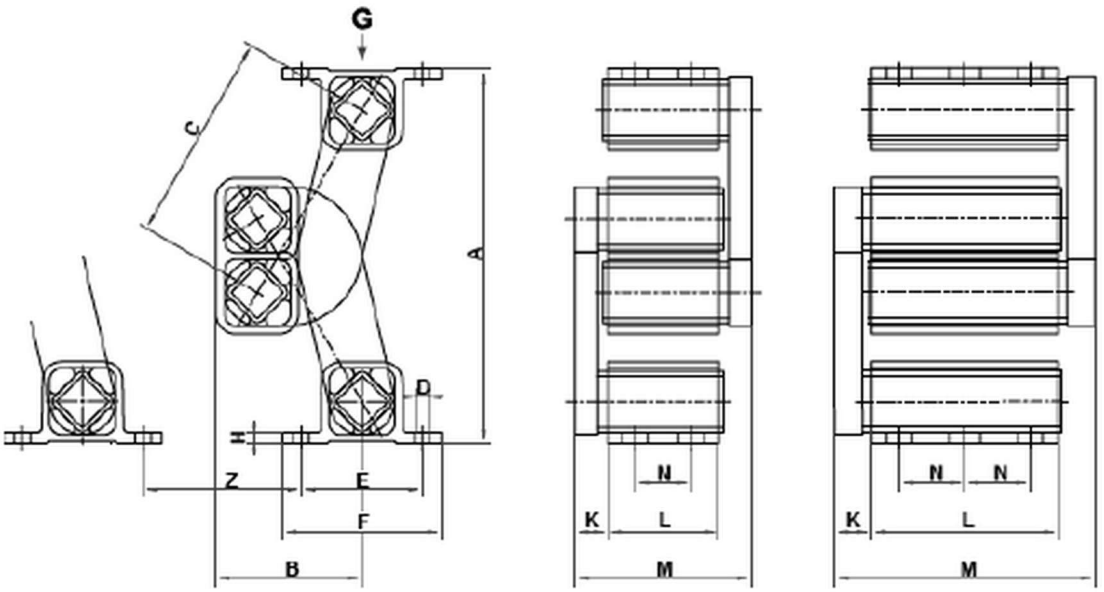

Art. No.	Type	Load capacity Gmin. - Gmax. [N]	A unloaded	A* max. load	B unloaded	B* max. load	C	D	E	F	H	K	L	M	N	Weight [kg]
07 361 005	AB-LF45	1500 - 2600	399	277	155	223	225	13 x 27	115	145	9	28	100	156	58	12
07 361 006	AB-LF50	3000 - 4800	402	278	157	226	225	17 x 27	130	170	12	35	120	190	60	16.8
07 361 007	AB-LF50-1.6	4000 - 6400	402	278	157	226	225	17 x 27	130	170	12	40	160	240	70	20.8
07 361 008	AB-LF50-2	5000 - 8000	402	278	157	226	225	17 x 27	130	170	12	40	200	280	70	23.7

One mass systems

- Circular Motion Screens. The AB-LF products can be used without any restrictions. Positioned in diamond arrangement.
- Linear Motion Screens: Please pass your calculations and considerations through the application development department for evaluation of the optimal element choice and positioning.